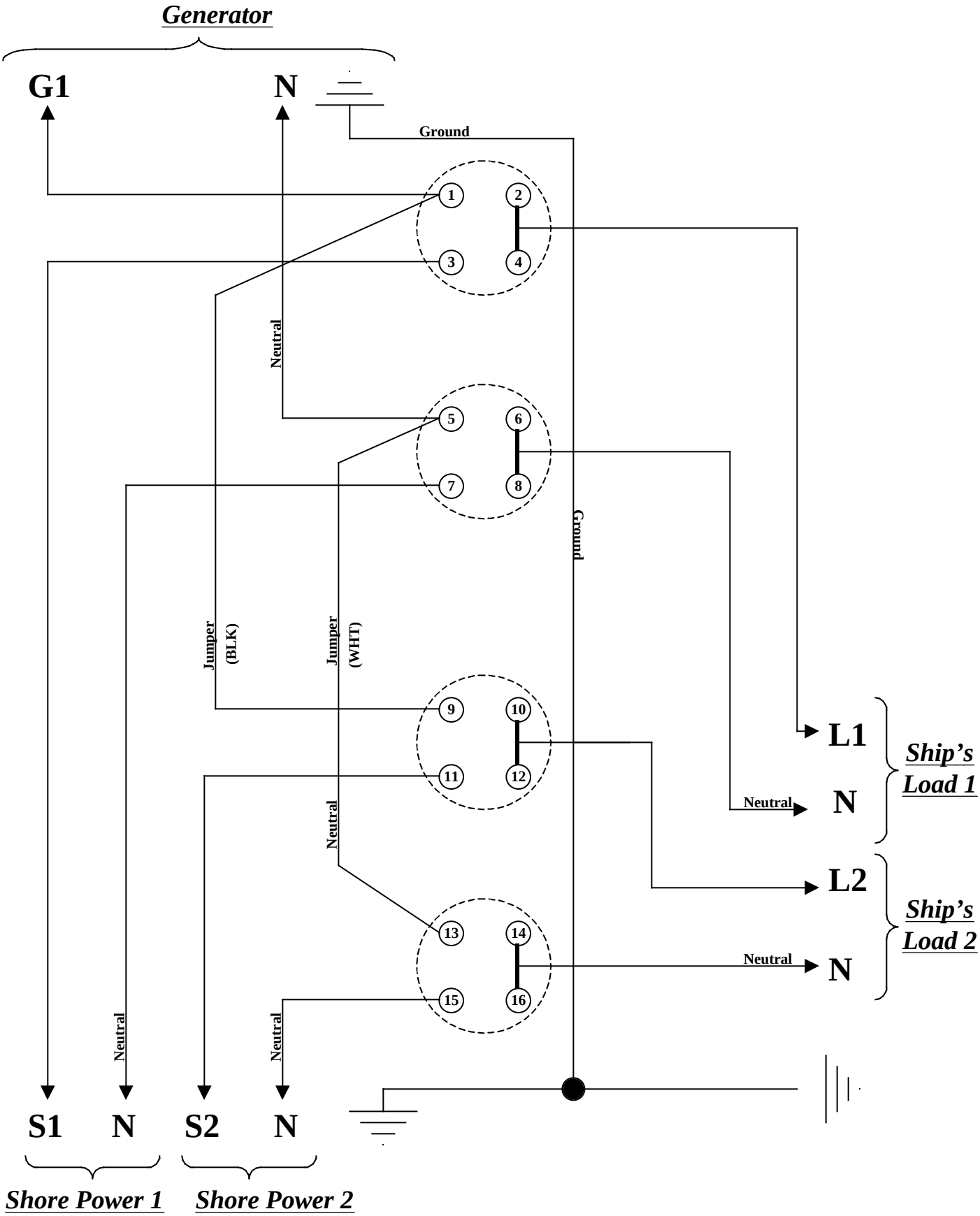Custom Marine Services
800-992-7922
A213 4Pole SH/OFF/GEN